iLOQ S55

KIK Schlage for Hybrid Cylinder

CK55...TL1
CK55...TL2

User Guide

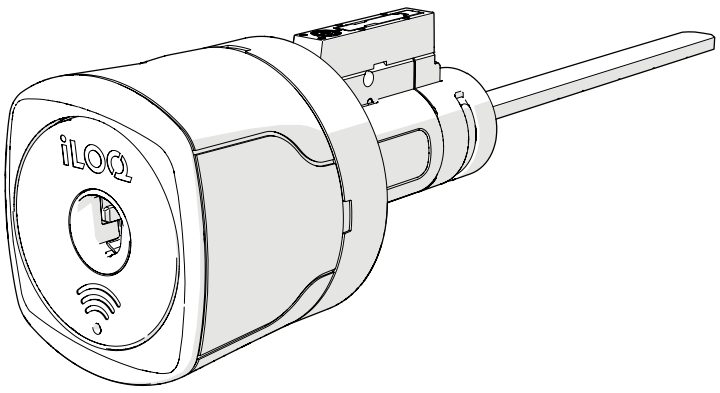

09/2026
Rev. 1.0

Document ID
329471

iLOQ Oy
support.iloq.com

Contents

1. Important product information 3
1.1 About this manual 3
1.2 Intended use 3
1.3 Non-conventional use 3
1.4 Terms of Service and Warranty 4
2. Important safety information 4
2.1 Signal words and symbols 4
2.2 Safety symbols used in this manual 5
2.3 Important safety for installation and use 6
3. Overview 7
3.1 iLOQ KIK for deadbolt cylinder 7
3.2 Tools supplied 8
3.3 Lazy tailpiece for iLOQ KIK Cylinder CK55...TL1 8
3.4 Lazy tailpiece for iLOQ KIK Cylinder CK55...TL2 9
4. Before installation 10
4.1 General information 10
4.2 Care & maintenance 10
5. Installation 11
5.1 Installation of the iLOQ KIK for Deadbolt Cylinder 11
6. Operating instructions 15
7. Installing the ADA Adapter 16
8. Changing the tailpiece of a KIK cylinder 21
8.1 Tailpiece removal 21
8.2 New tailpiece installation 23
8.2.1 For tailpiece AX50.Y.TL01, .TL02 or .TL03 23
8.2.2 For tailpiece AX50.Y.TL04 24
8.2.3 For tailpiece AX50.Y.TL05 26
9. Installing the tailpiece extender 28
10. Replacing the knob 30
11. Converting a KIK Cylinder to a Mortise Cylinder 33
12. Disposal of decommissioned products 39
13. Compliance 40

1. Important product information

1.1 About this manual

This user manual contains important information and instructions for properly installing and using the iLOQ CK55...TL1 and CK55...TL2 hybrid cylinders.

The content of this manual is current at the time of publication. iLOQ reserves the right to change availability of any item in this guide, its design, construction, and/or its materials. For the most current information, see our website at [support.iloq.com.](support.iloq.com)

	Read and follow these instructions and any other instructions provided by iLOQ carefully before installing or using the products. This information is to ensure your safety and the long lifetime of the products. Failure to do so may result in injury, malfunction, damage or a safety hazard.
	After installation, pass these instructions and any maintenance instructions on from the installer to the user. If there are any deviations from the contents in foreign language versions of the documentation, the English original shall apply in case of doubt.

1.2 Intended use

This product is designed and intended for locking doors.

	Do not use this product for any other purpose. Using the product for unintended purposes may result in damage, malfunction, or safety hazards.

1.3 Non-conventional use

	Only use this product in the ways and for the purposes specified in this manual. Obey all safety information. Only install and use the product as described in this manual.

1.4 Terms of Service and Warranty

- The lock cylinder has a 24 month warranty. By purchasing or using the product, you agree to the Terms of Service found at www.iloq.com.
- If you suspect that this product is broken, do not attempt to repair it. Contact iLOQ customer support for professional assistance.

2. Important safety information

2.1 Signal words and symbols

Sign	Description
WARNING	"WARNING" indicates a potentially hazardous situation which, if not avoided, could result in death or serious injury.
CAUTION	"CAUTION" indicates a potentially hazardous situation which, if not avoided, could result in minor or moderate injury.
NOTICE	"NOTICE" indicates a potential situation which, if not avoided, might result in property damage.
	**Hazard** The black symbol inside a yellow triangle with a black border describes the hazard.
	**Prohibition** The black symbol inside a red ring with a diagonal red bar describes the action that should not be taken.
	**Mandatory action** The white symbol inside a blue circle describes the action that must be taken to avoid a hazardous situation.

2.2 Safety symbols used in this manual

Symbols for mandatory action:

	Read the instructions
	General mandatory action

Symbols for prohibited action:

	General prohibited action

Symbols for hazards:

	General hazard

2.3 Important safety for installation and use

WARNING

Choking hazard!
This product contains small parts, including small magnets which can cause death or serious injury.
Do not disassemble the product. Keep the product away from small children. If a child swallows magnets, seek medical help immediately.

WARNING

Magnetic hazard!
This product contains small magnets. Medical devices, such as implanted pacemakers and defibrillators may contain sensors that respond to magnets and radios when in close contact to the product and can cause death or serious injury.
To avoid any potential interactions of medical devices, keep the product a safe distance away from your device (more than 4 inches/10 cm but consult your healthcare provider and your device manufacturer for specific guidelines).
Do not place your credit card or any other magnetic stripe cards near this product.

- This product must be installed only by professional personnel who have received training arranged by or on behalf of iLOQ.
- Only use an authentic iLOQ tailpiece. The use a of non-iLOQ tailpiece can compromise the built-in security features.
- Do not attempt to bypass the locking feature, tamper with the lock or disassemble it. Doing so will compromise the built-in security and damage the product.
- To avoid damage, handle the product with care and do not force any parts during installation and use. The knob should turn easily and the cylinder should operate smoothly.
- Do not apply any liquid to the product, including water, grease, solvent, or corrosive substance, except as specified in this manual.
- Do not expose this product to excessive heat sources, open flames, or heating devices.
- This product contains small magnets. To prevent the batteries of the Programming Key (P55S.3) and the Key Fob (K55S.2) from draining, store the product in a separate box away from them.
- After operating the lock, make sure that the knob is rotated back to its normal locked position.

- Read and follow these instructions and any other instructions provided by iLOQ carefully before installing or using the products. This information is to ensure your safety and the long lifetime of the products. Failure to do so may result in injury, malfunction, damage or a safety hazard.

NFC operated iLOQ lock cylinders must be installed at least 20 cm (8 inches) away from RFID/NFC readers. Installing lock cylinders and readers closer than 20 cm (8 inches) may cause communication interference, which can lead to access problems.

3. Overview

3.1 iLOQ KIK for deadbolt cylinder

The iLOQ CK55...TL1 and CK55...TL2 are hybrid cylinders for the iLOQ S55 product family in the 5 Series+ platform.

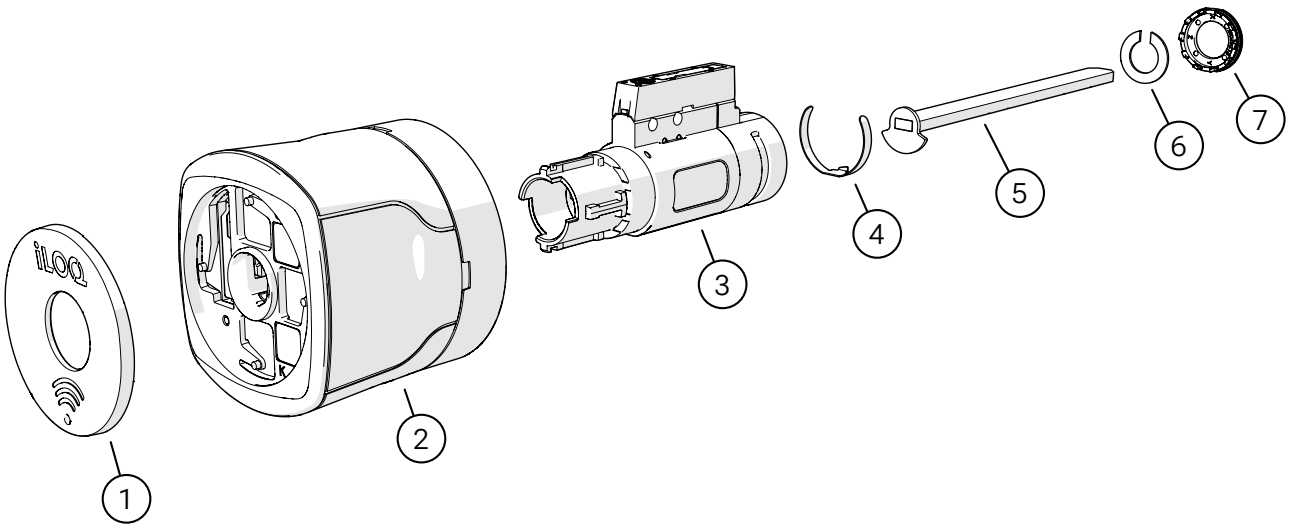

1. Front cap
2. Knob
3. Cylinder
4. Plunger
5. Lazy tailpiece
6. Tailpiece spacer
7. Crown

3.2 Tools supplied

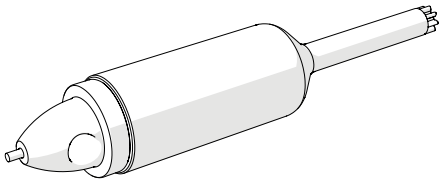

1. Knob removal tool

3.3 Lazy tailpiece for iLOQ KIK Cylinder CK55...TL1

The lazy tailpiece for the KIK Cylinder CK55...TL1 has a 45-degrees angle, and it is used with B560/B660 deadbolts or with any other deadbolts that have a bolt with a similar 45-degrees angle.

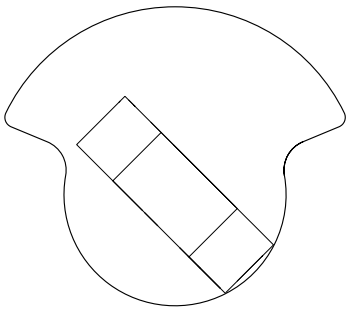

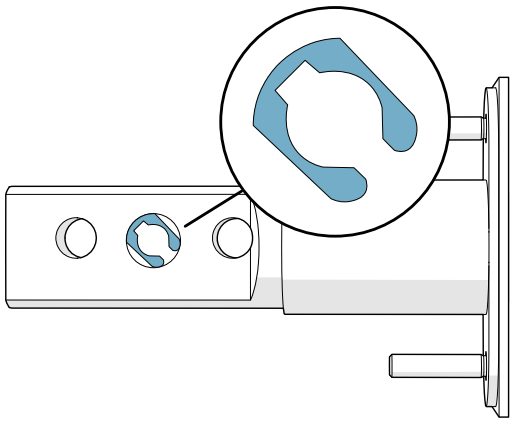

- 45 degrees Lazy Tailpiece

3.4 Lazy tailpiece for iLOQ KIK Cylinder CK55...TL2

The lazy tailpiece for KIK Cylinder CK55...TL2 is horizontal, and it is used with most standard deadbolts that work with a KIK cylinder.

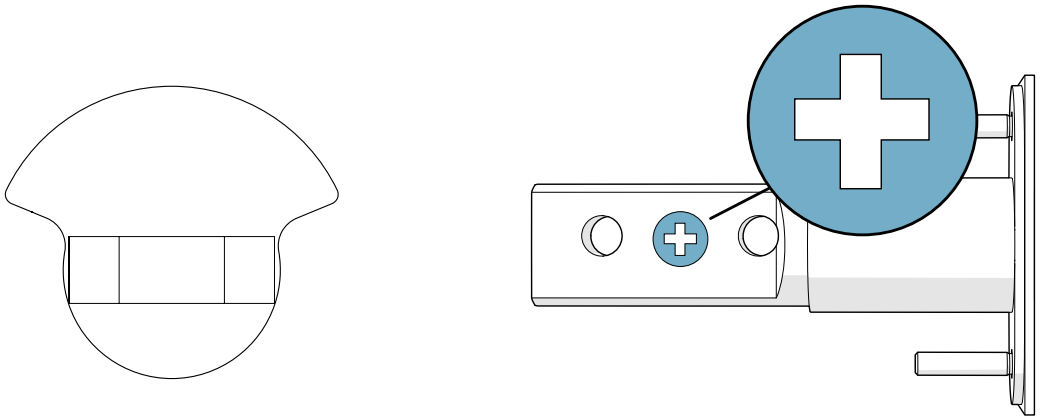

- Horizontal Lazy Tailpiece

4. Before installation

4.1 General information

- This product is available with different types of tailpieces. Make sure that you select the correct tailpiece according to the door hardware.
- If the product is installed on a fire door, examine the fire certification to ensure conformity. If needed, contact an iLOQ sales representative for assistance.
- Make sure that the operation of the product complies with the local building codes, security regulations and any other applicable regulations.
- After installation, make sure that the product operates properly without interference from weatherstripping, or other parts of the door. Make sure that the door opens, closes, and swings freely without interference from any projecting part of the lock assembly.
- IMPORTANT: After installation, pass these instructions and any maintenance instructions on from the installer to the user. If there are any deviations from the contents in foreign language versions of the documentation, the English original shall apply in case of doubt.

4.2 Care & maintenance

The product is designed to be maintenance-free. It does not require any regular maintenance.

5. Installation

5.1 Installation of the iLOQ KIK for Deadbolt Cylinder

1. Cut the tailpiece to the proper length according to the door thickness.
1. Insert the smaller end of the knob removal tool into the hole at the edge of the cap and gently pull the knob removal tool to the right to remove the front cap.

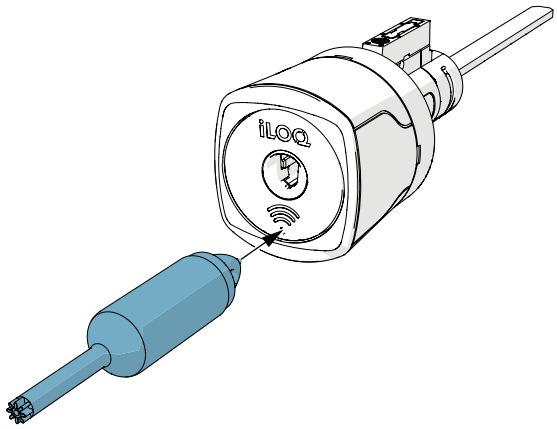

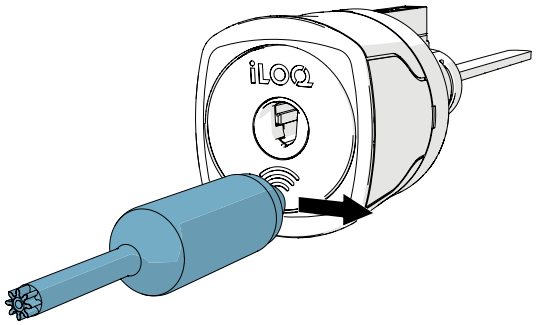

2. Insert the larger end of the knob removal tool into the front of the knob to remove the knob from the cylinder.

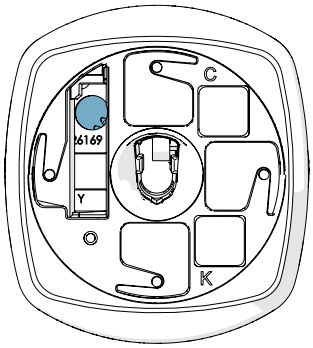

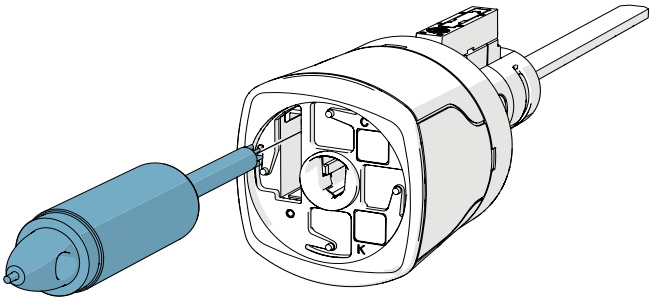

3. Rotate the knob removal tool counter-clockwise to detach the knob.

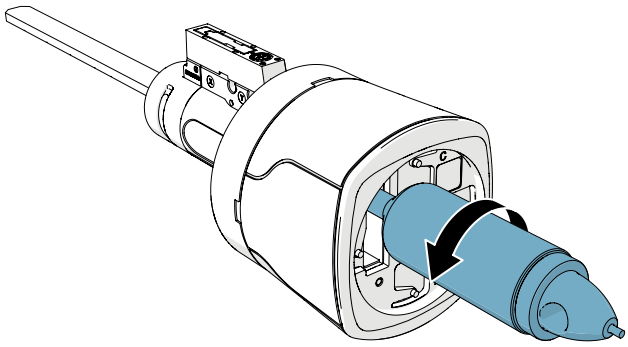

4. Pull the knob from the cylinder.

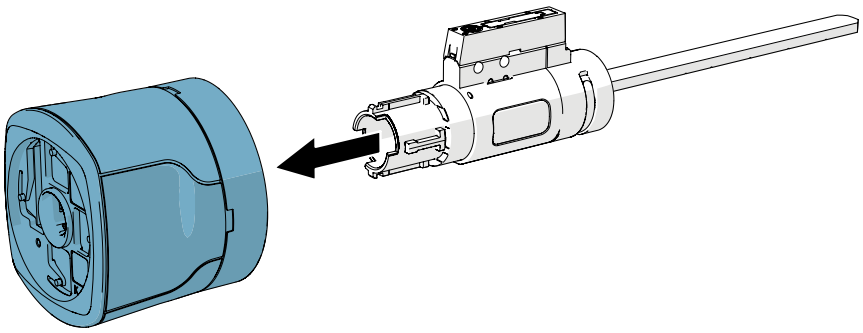

5. Slide the KIK cylinder into the deadbolt body.

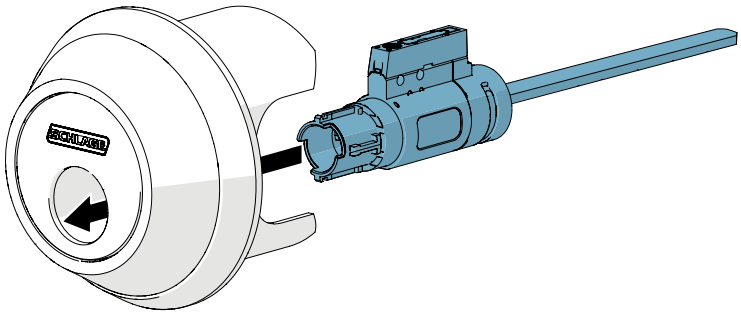

NOTE! An iLOQ high guard escutcheon for deadbolt B560/ B660 could be used to provide an extra protection to the knob. Remove the B560/B660 trim ring and replace it with the iLOQ high guard escutcheon (Product code: AX50.Y.ES1.XX).

6. Slide the knob onto the cylinder until it stops.

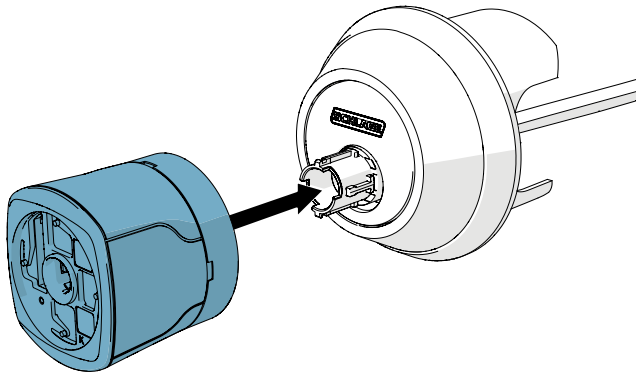

7. Rotate the knob removal tool clockwise to attach the knob to the deadbolt.

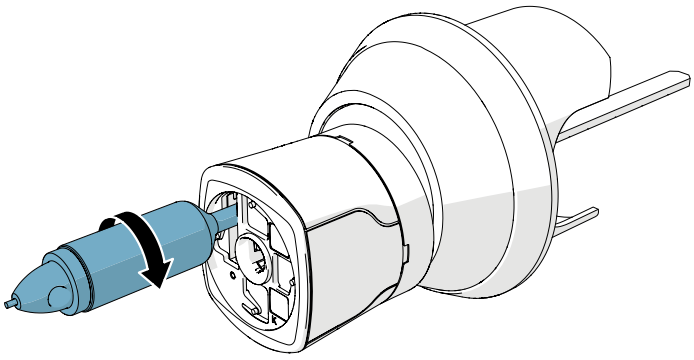

8. Insert the front cap into the knob. The iLOQ logo on the cap should be horizontal when the cylinder is locked.
   Slightly rotate the front cap clockwise by hand until it is locked in place.

NOTE! The front cap can be installed in four different orientations (0º, 90º, 180º and 270º angles) based on the orientation of the lock.

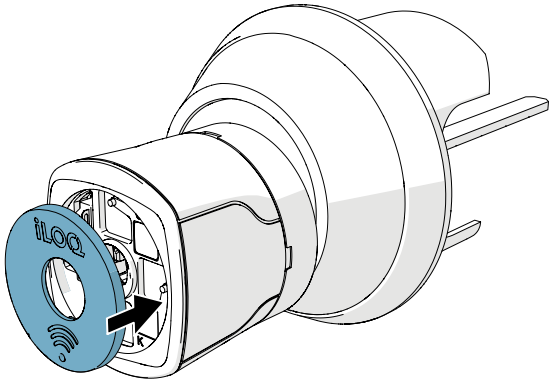

NOTE! When inserting the KIK Cylinder **CK55...TL2** Cylinder into the deadbolt's bolt, make sure of the following:

For right hand doors:

- The deadbolt's bolt is retracted inside the door (open position).
- The tailpiece is in the horizontal position.
- The tailpiece flange is facing down.

For left hand doors:

- The deadbolt's bolt is retracted inside the door (open position).
- The tailpiece is in the vertical position.

NOTE! Depending on the type of deadbolt used, the thumbturn of the deadbolt may be shifted 90 degrees.

Position of the tailpiece for right hand doors

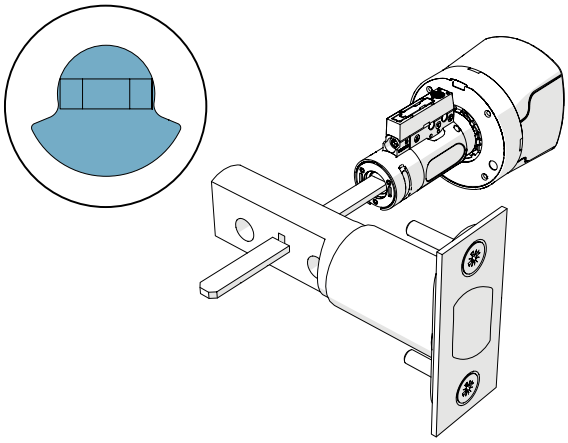

Position of the tailpiece for left hand doors

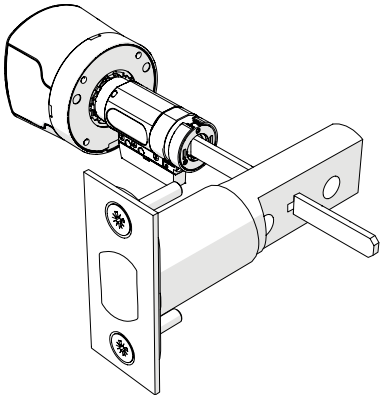

6. Operating instructions

WARNING

Magnetic hazard!

This product contains small magnets. Medical devices, such as implanted pacemakers and defibrillators may contain sensors that respond to magnets and radios when in close contact to the product and can cause death or serious injury.

To avoid any potential interactions of medical devices, keep the product a safe distance away from your device (more than 4 inches/10 cm but consult your healthcare provider and your device manufacturer for specific guidelines).

Do not place your credit card or any other magnetic stripe cards near this product.

1. Hold a valid key against the knob and wait until the key shows a green light.

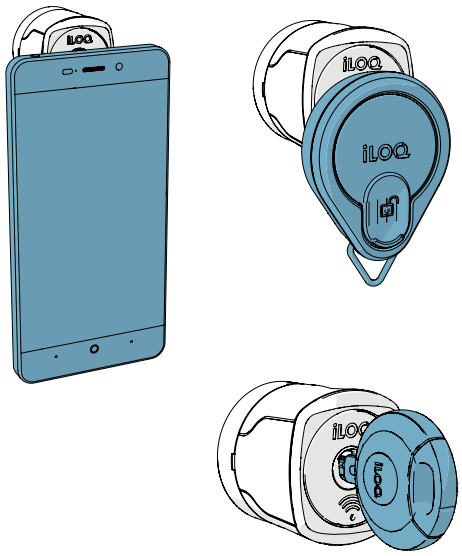

NOTE! Due to the large variety of phone models and operating system versions, iLOQ cannot guarantee that all NFC-enabled phones will work seamlessly with our NFC locks.

NOTE! Do not use excessive force when operating the lock (Max. 2 Nm of torque).

NOTE! Before using the locks, check where the NFC antenna is located in your phone so that you know the best position to hold the phone against the knob.

2. Turn the knob to unlock or lock the door.

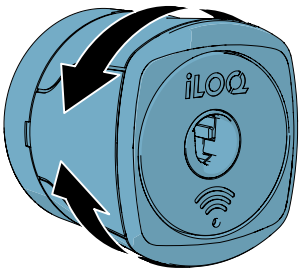

NOTE! Depending on the configuration, the lock will stay in the open status for 5-15 seconds. Do not force the knob.

3. Make sure that the knob is in the original locked position and **cannot be rotated** before leaving the door.

7. Installing the ADA Adapter

Parts needed:

- ADA Adapter for Hybrid knob
- Knob removal tool

1. Insert the smaller end of the knob removal tool into the hole at the edge of the cap and gently pull the knob removal tool to the right to remove the front cap.

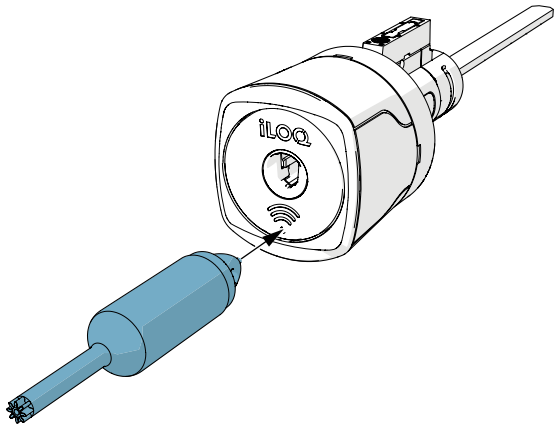

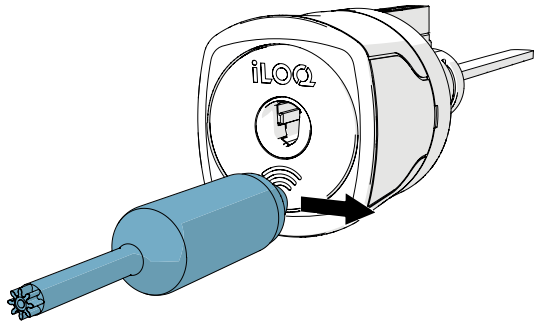

2. Insert the larger end of the knob removal tool into the front of the knob to remove the knob from the cylinder.

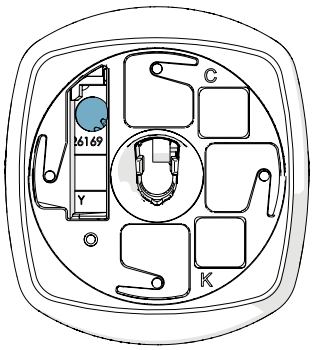

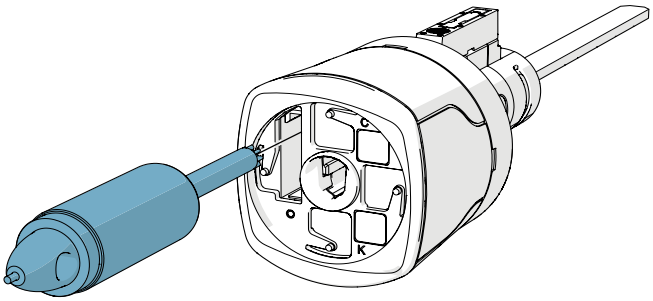

3. Rotate the knob removal tool counter-clockwise to detach the knob.

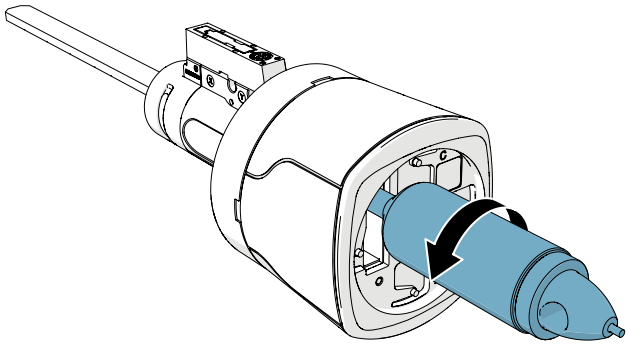

4. Pull the knob from the cylinder.

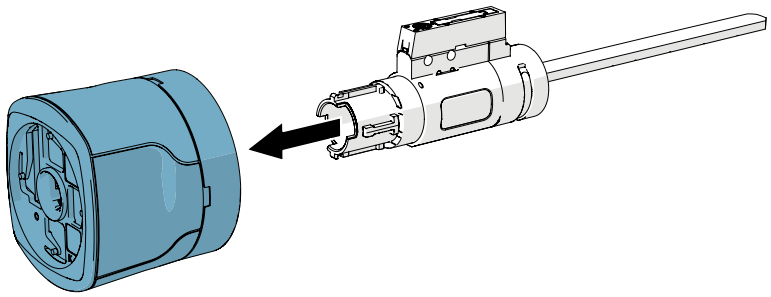

5. Slide the filler into place.

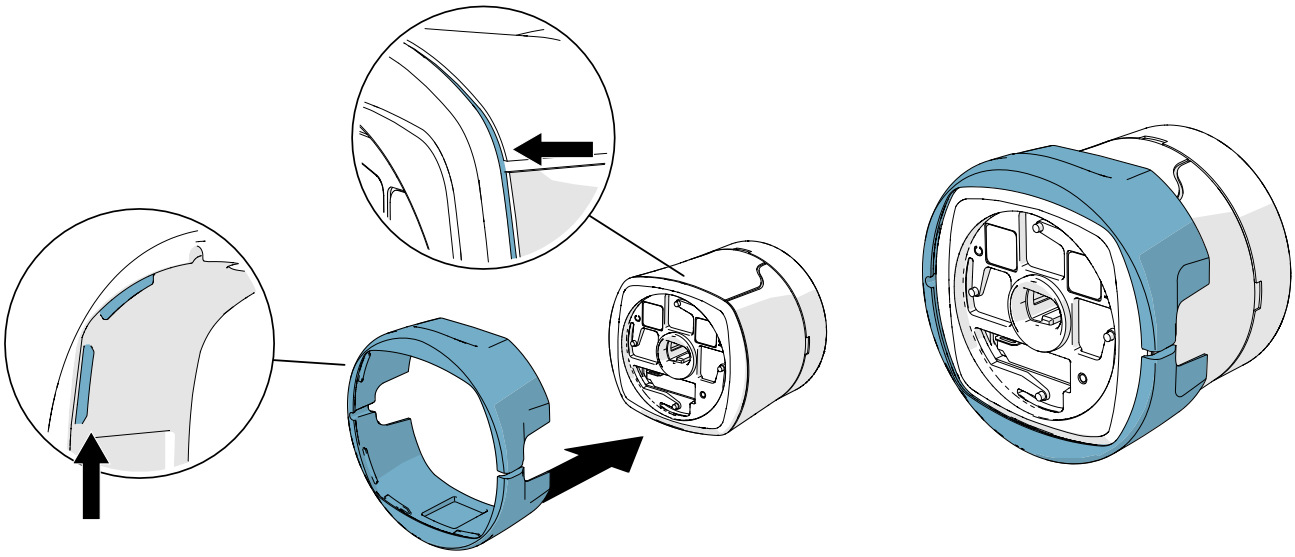

6. Place the ADA Adapter around the knob.

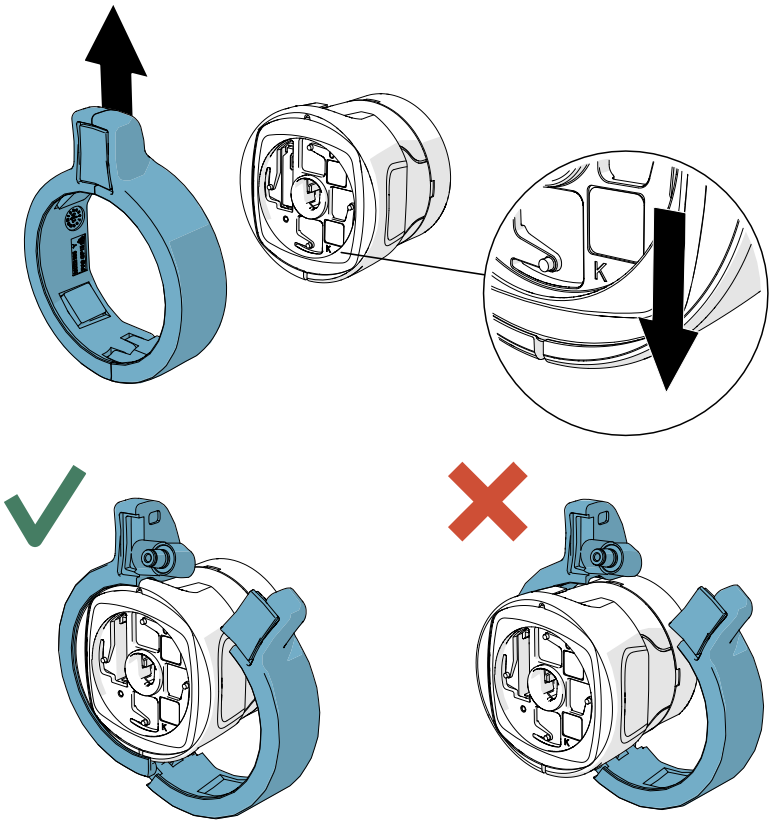

NOTE! The screw side should be facing the door and the upper lip of the adapter should sit on top of the upper lip of the knob.

7. Close the ADA-adapter.

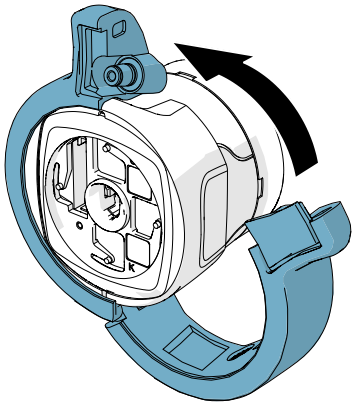

8. Tighten the T6 fixing screw on the bottom of the adapter (Max 0.1 Nm of torque).

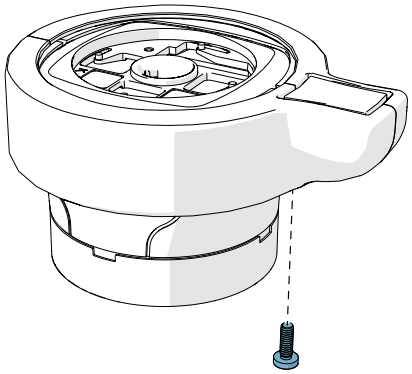

9. Slide the knob onto the cylinder until it stops.

NOTE! Make sure that the knob is inserted the correct way around so that the straight edges of the cylinder and knob align horizontally.

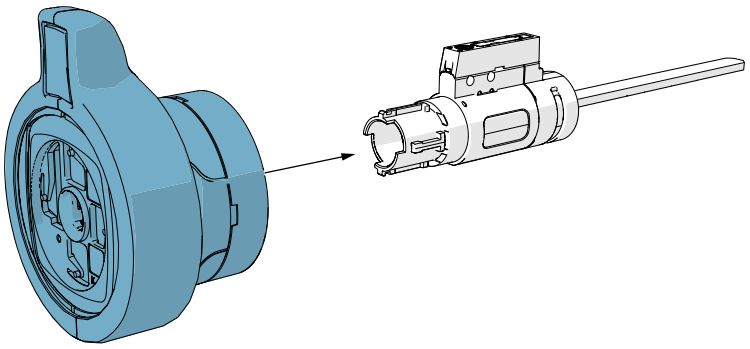

10. Rotate the knob removal tool clockwise to attach the knob.

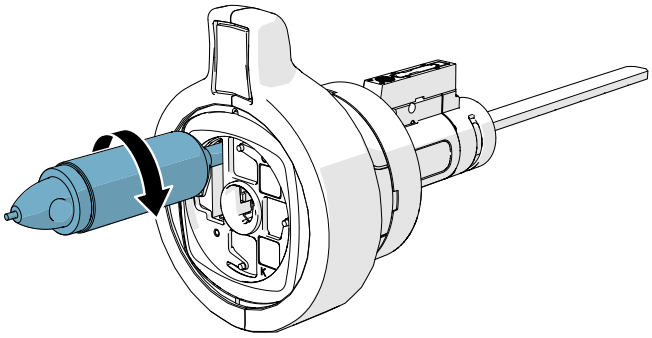

11. Insert the front cap into the knob. The iLOQ logo on the cap should be horizontal when the cylinder is locked.
    Slightly rotate the front cap clockwise by hand until it is locked in place.

NOTE! The front cap can be installed in four different orientations (0º, 90º, 180º and 270º angles) based on the orientation of the lock.

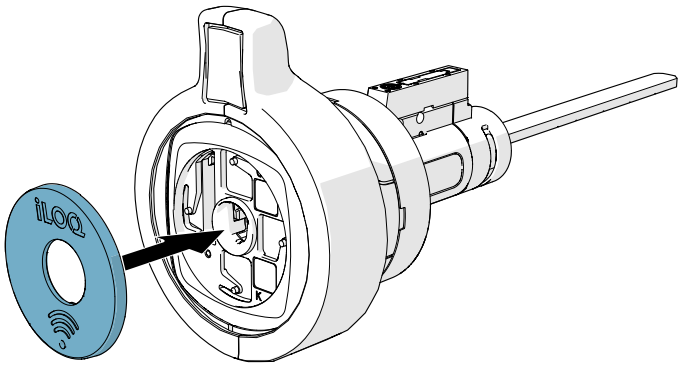

8. Changing the tailpiece of a KIK cylinder

NOTE! Only use an authentic iLOQ tailpiece. The use a of non-iLOQ tailpiece can compromise the built-in security features.

Parts needed:

- AX50.G.01 - ANSI Cylinder Tool Kit:
  - Crown installation tool
- AX50.Y.TX - KIK Tailpiece (specify the needed tailpiece when ordering)

8.1 Tailpiece removal

1. Remove the KIK cylinder plunger using tweezers.

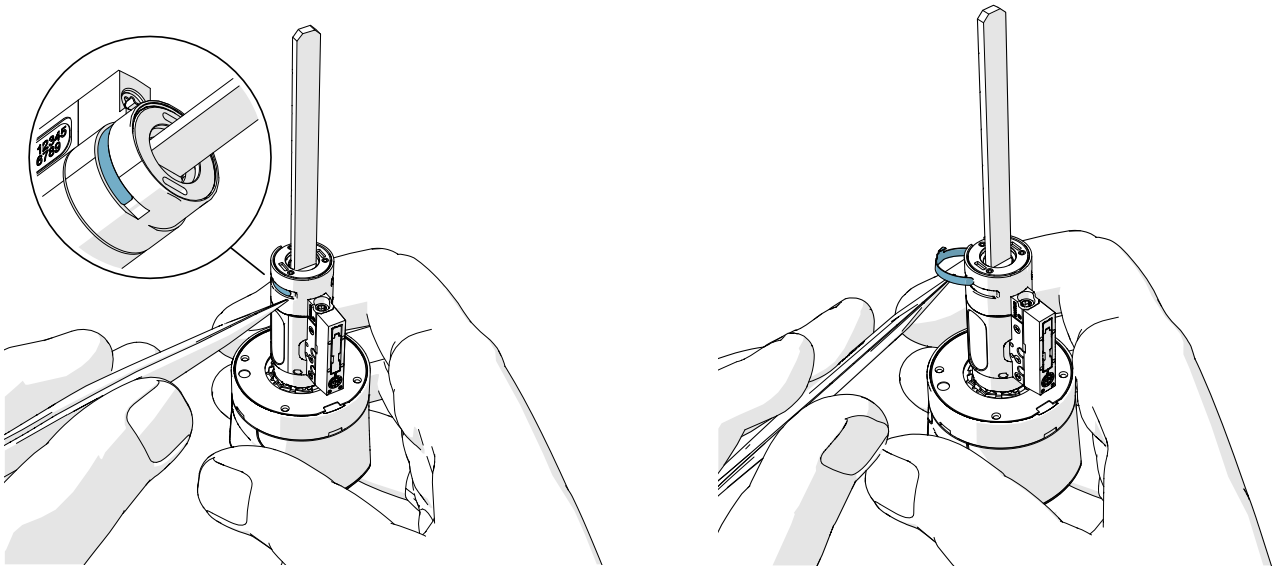

2. Insert the crown installation tool into the crown piece of the KIK cylinder and turn it counterclockwise.

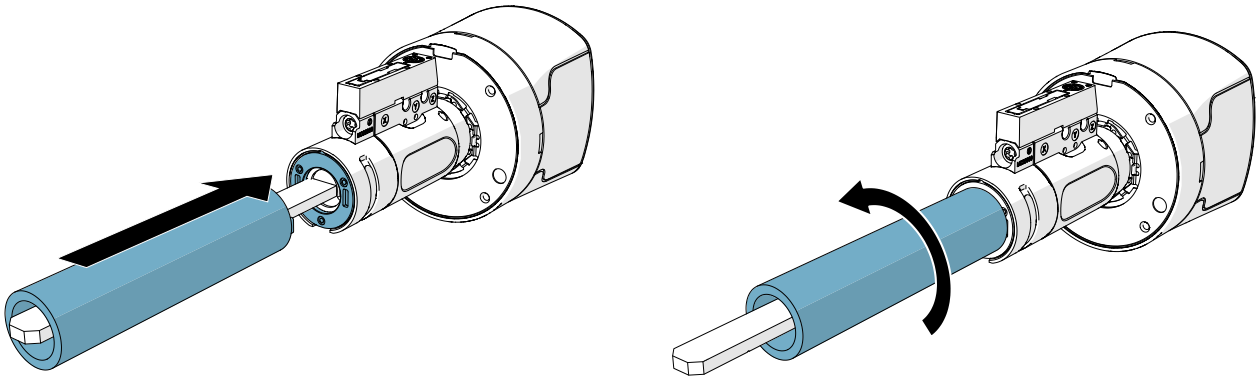

3. Remove the tailpiece from the cylinder.

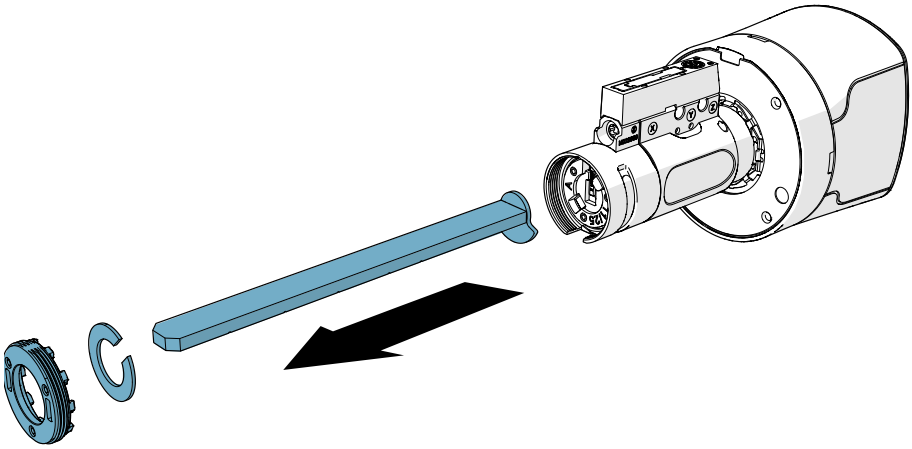

4. Push the plunger back into its designated position.

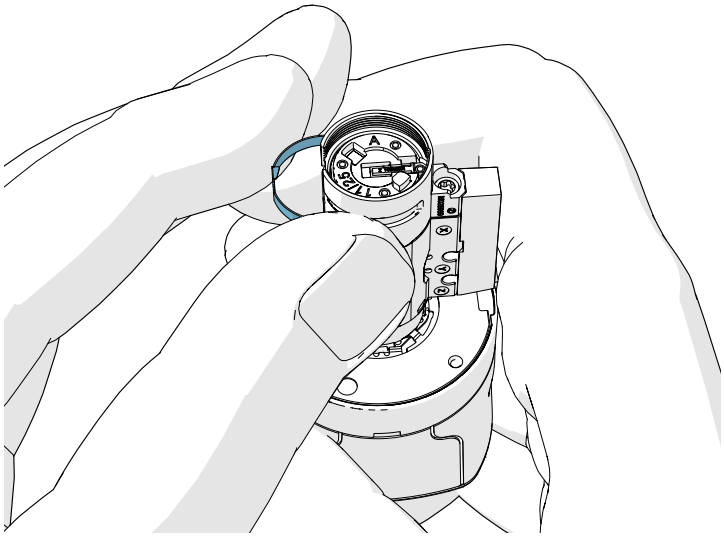

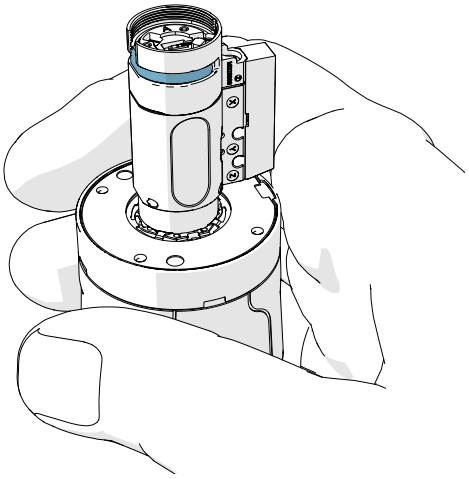

8.2 New tailpiece installation

8.2.1 For tailpiece AX50.Y.TL01, .TL02 or .TL03

1. Insert the new tailpiece and place the spacer in its position.

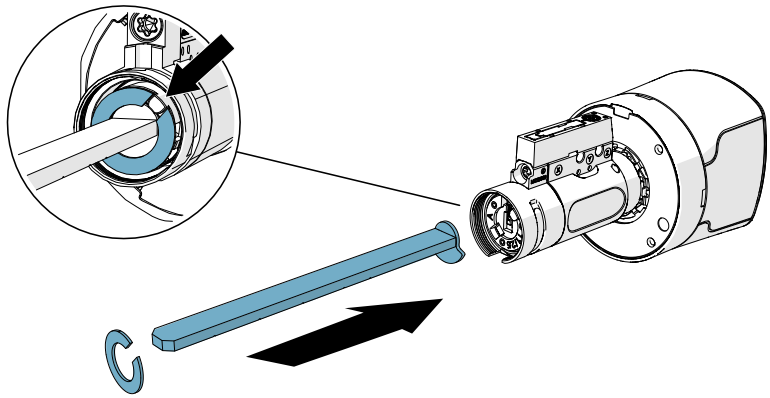

2. Place the crown on the tailpiece.

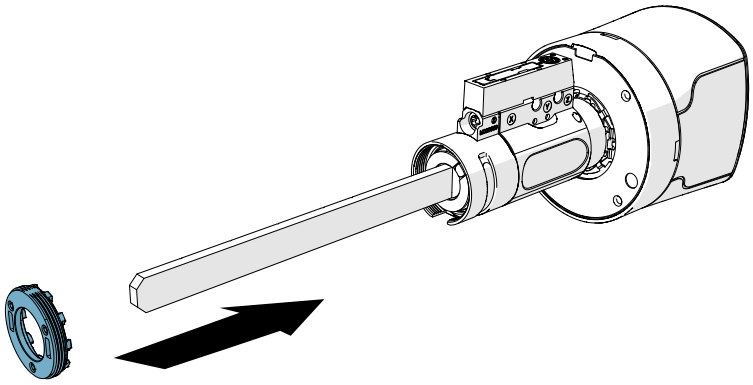

3. Insert the crown installation tool and turn it clockwise until it is flush against the cylinder.

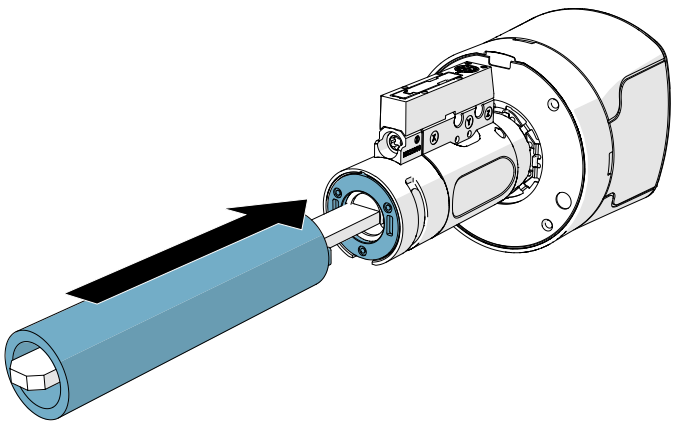

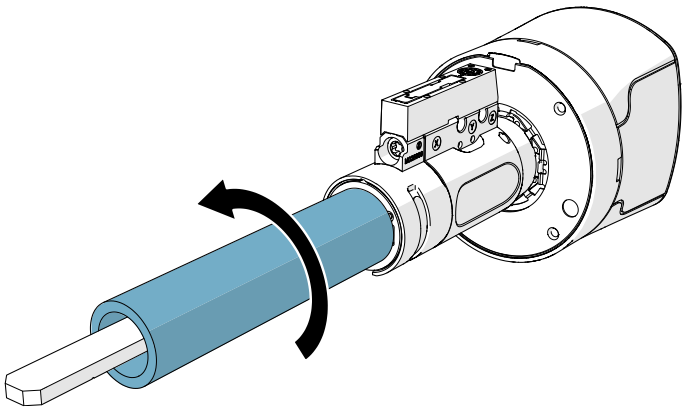

4. Turn the crown installation tool slightly counterclockwise until it stops.

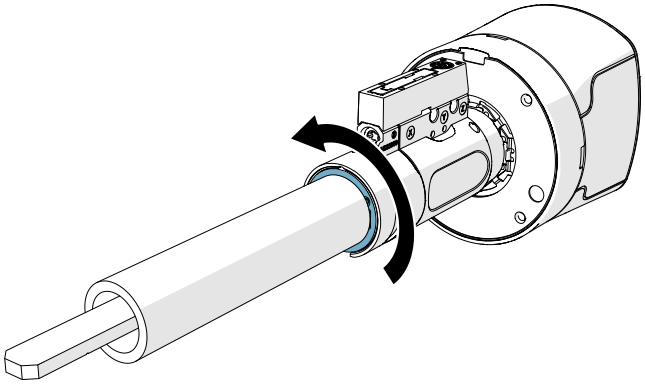

8.2.2 For tailpiece AX50.Y.TL04

1. Slide the tailpiece into the cross base.

> **!** NOTE! Make sure that the orientation of the tailpiece inside the base is identical for both cylinders of the double deadbolt.

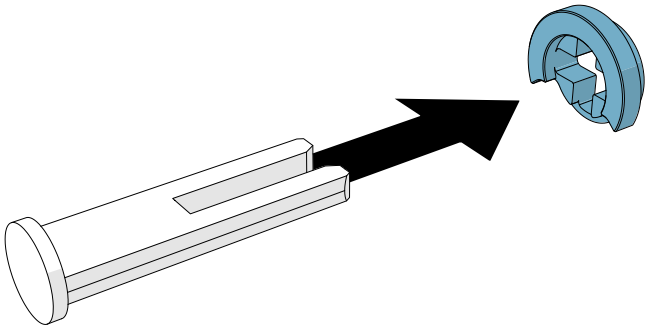

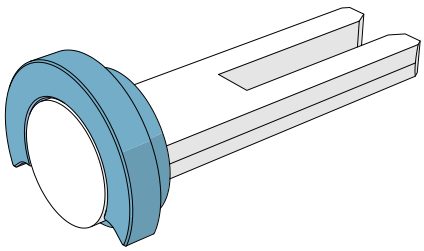

2. Insert the base with the tailpiece into the cylinder.

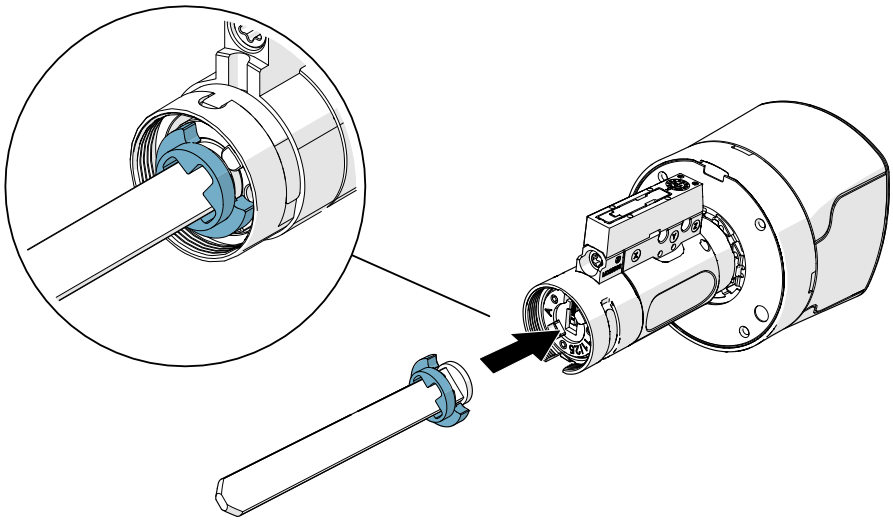

3. Place the crown on the tailpiece.

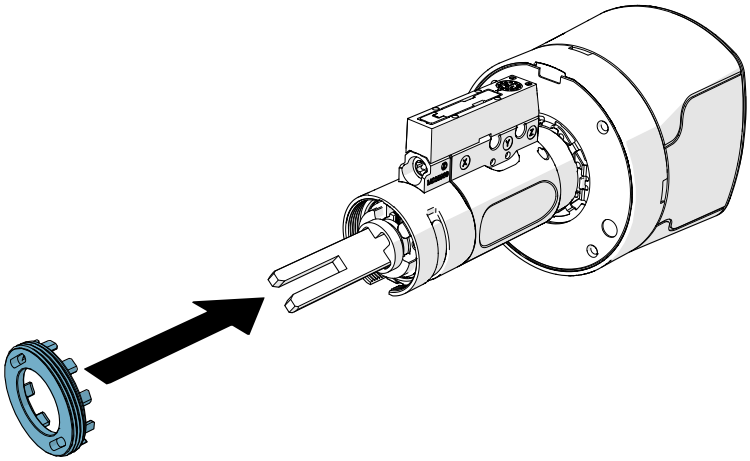

4. Insert the crown installation tool and turn it clockwise until it is flush against the cylinder.

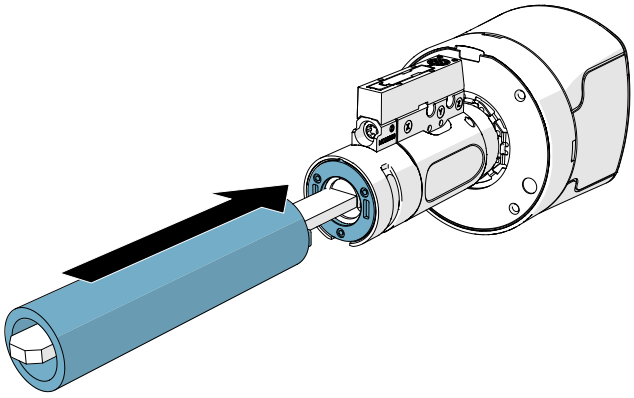

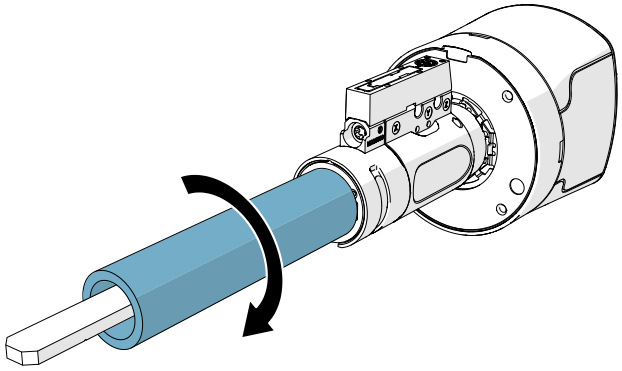

5. Turn the crown installation tool slightly counterclockwise until it stops.

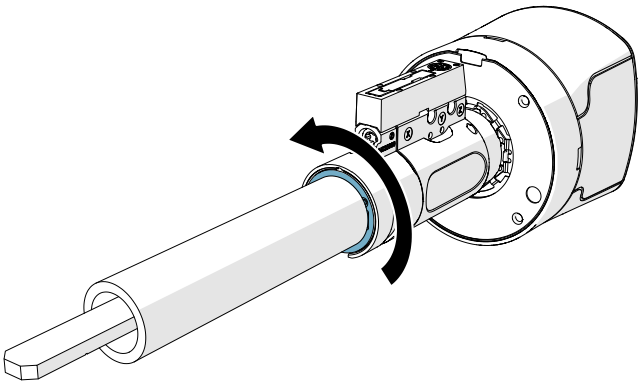

8.2.3 For tailpiece AX50.Y.TL05

1. Slide the tailpiece into the cross base.

NOTE! For a **RH door**, the orientation of the tailpiece inside the cross base must be as shown in the picture below.

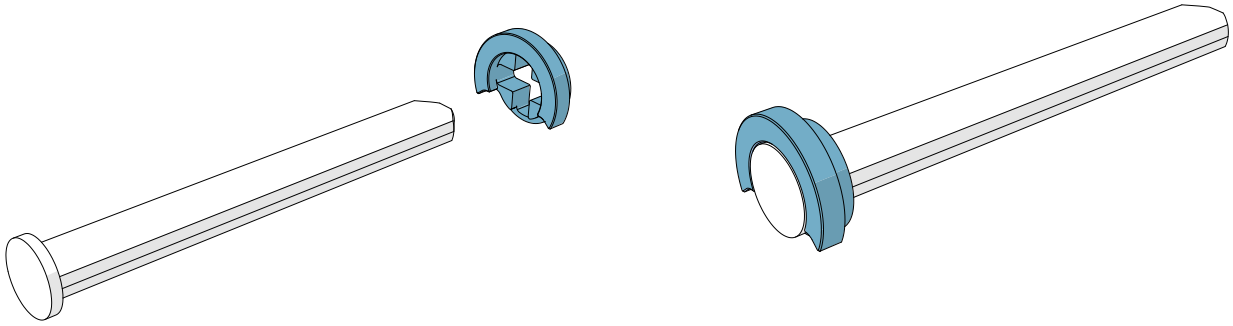

NOTE! For a **LH door**, the orientation of the tailpiece inside the cross base must be as shown in the picture below.

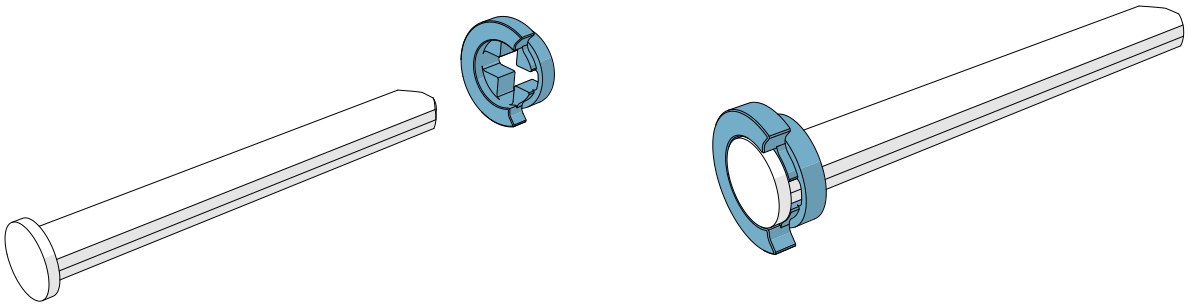

2. Insert the base with the tailpiece into the cylinder.

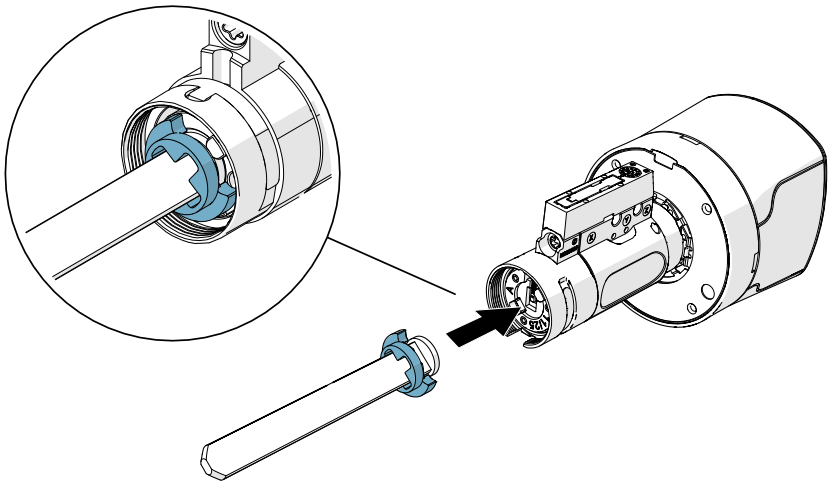

3. Place the crown on the tailpiece.

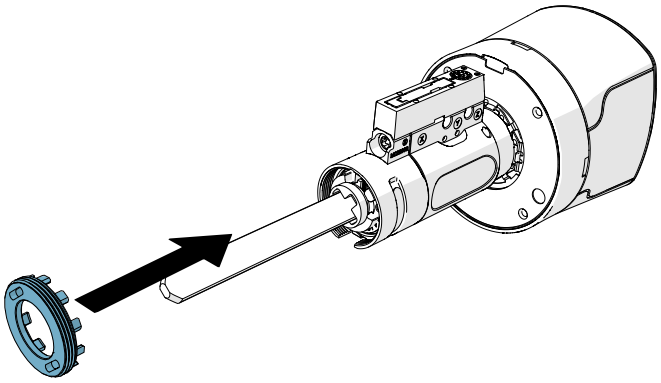

4. Insert the crown installation tool and turn it clockwise until it is flush against the cylinder.

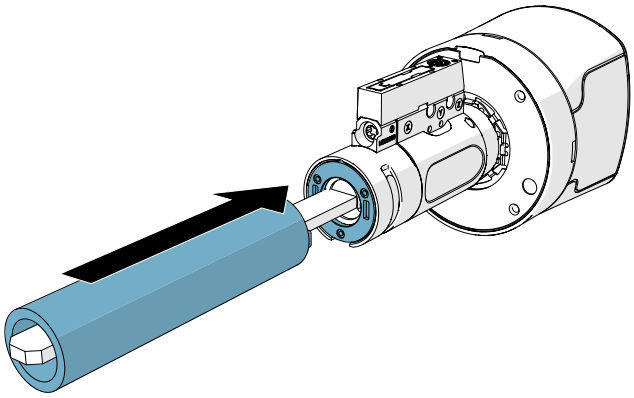

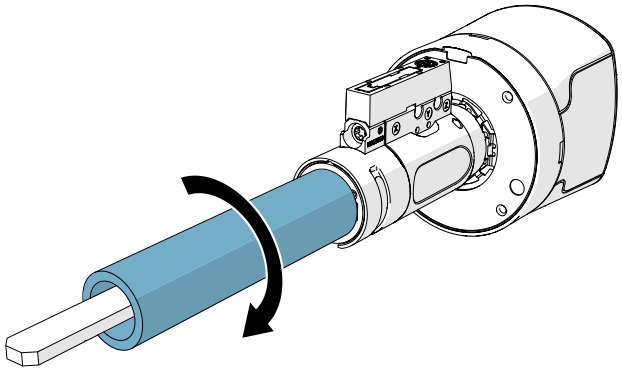

5. Turn the crown installation tool slightly counterclockwise until it stops.

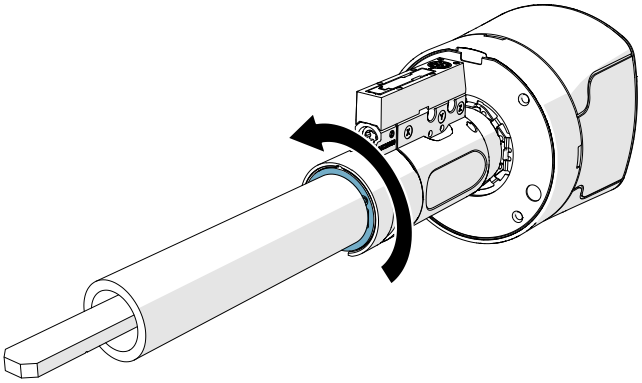

9. Installing the tailpiece extender

For thick doors, use the tailpiece extender to connect two tailpieces together.

Parts needed:

- AX50.Y.G.03 – Tailpiece Extender for KIK Deadbolt
- Y50S.T.TLXX – KIK Cylinder with tailpiece
- AX50.Y.TL01/.TL02 – Additional KIK Tailpiece

1. Insert the KIK cylinder with the tailpiece into one side of the extender.
2. Determine the best position for the extender to be placed.

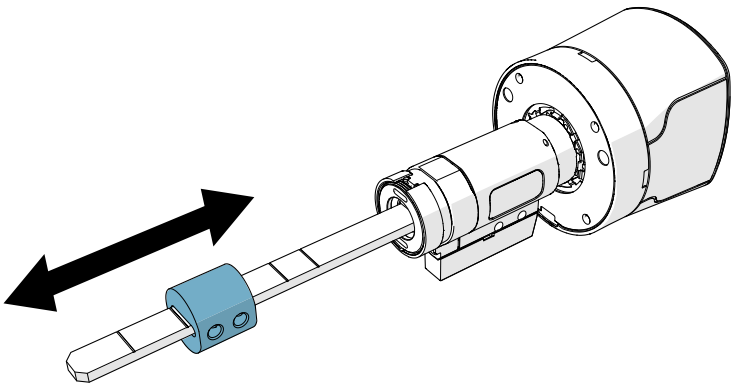

3. Cut the excess tailpiece if needed.

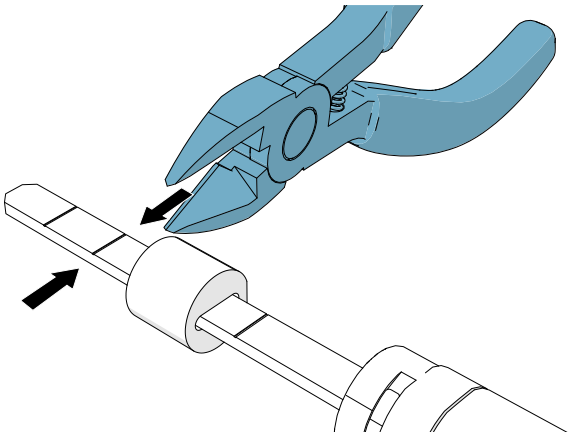

4. Cut the additional tailpiece to the required length.

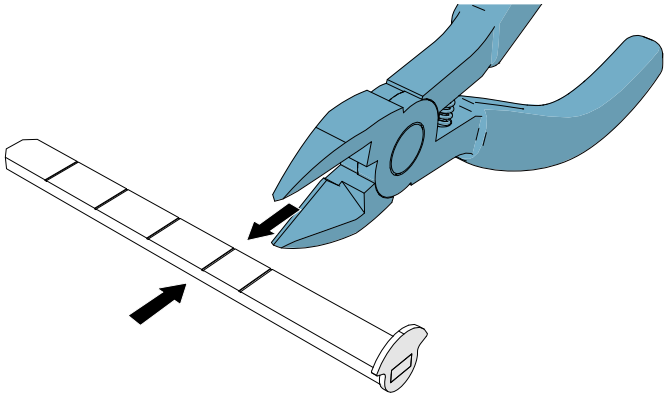

5. Insert the additional tailpiece into the extender.

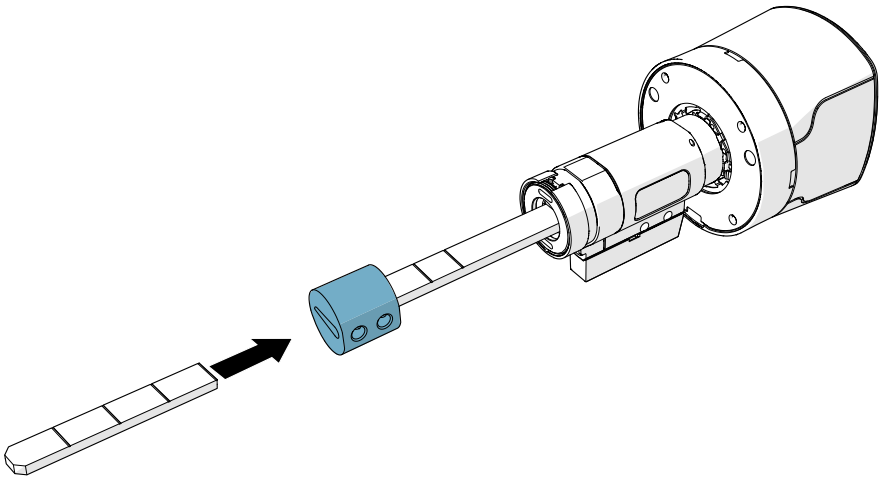

6. Tighten with two T6 screws to secure both tailpieces to the extender.

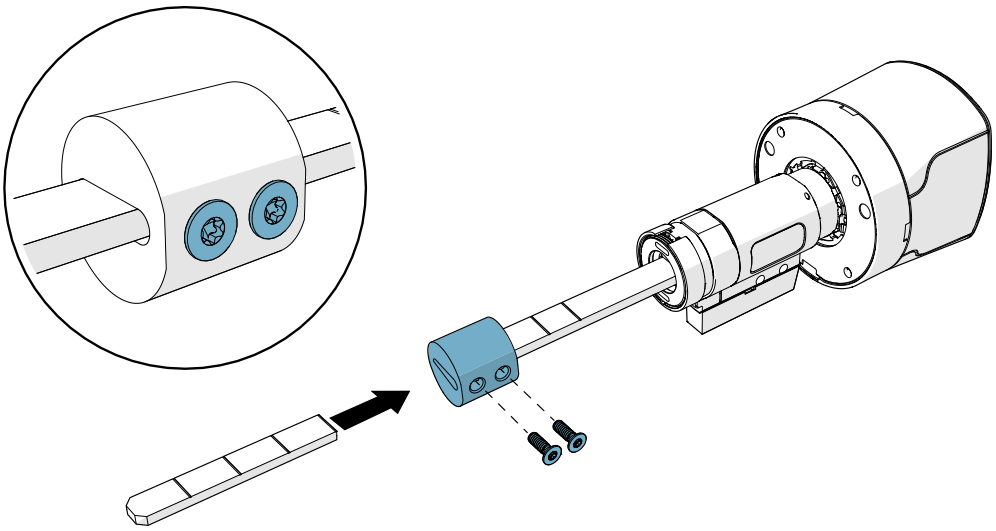

10. Replacing the knob

If necessary, use the following instructions to replace the knob.

Parts needed:

- Hybrid Knob Without Cap
- Front Cap
- Knob Removal Tool

1. Insert the smaller end of the knob removal tool into the hole at the edge of the cap and gently pull the knob removal tool to the right to remove the front cap.

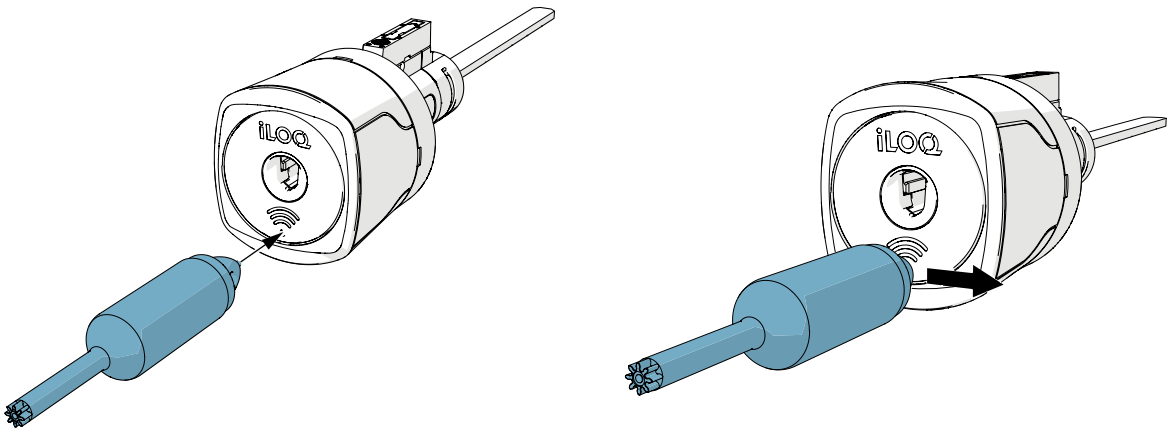

2. Insert the larger end of the knob removal tool into the front of the knob.

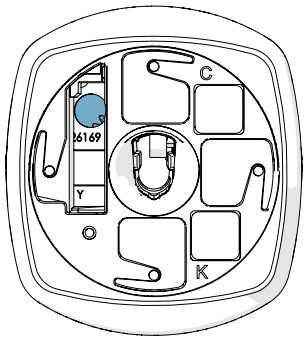

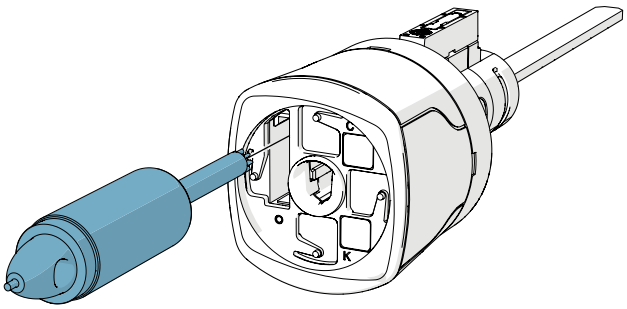

3. Rotate the knob removal tool counter-clockwise to detach the knob.

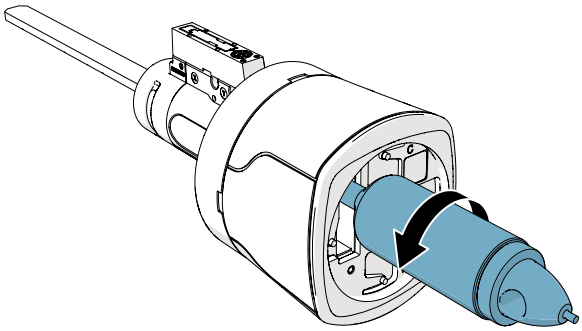

4. Pull the knob from the cylinder.

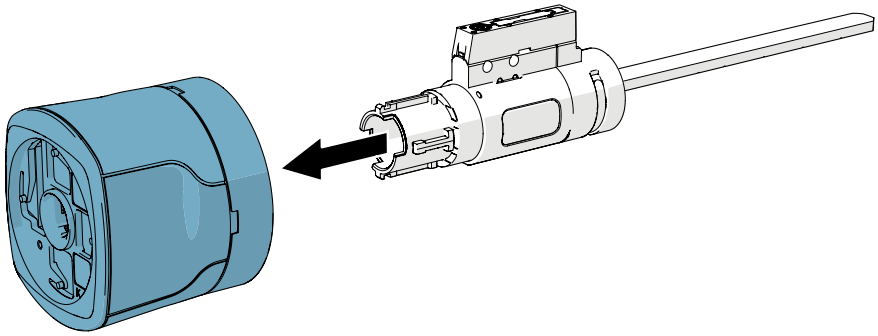

5. Slide the new knob onto the cylinder until it stops.

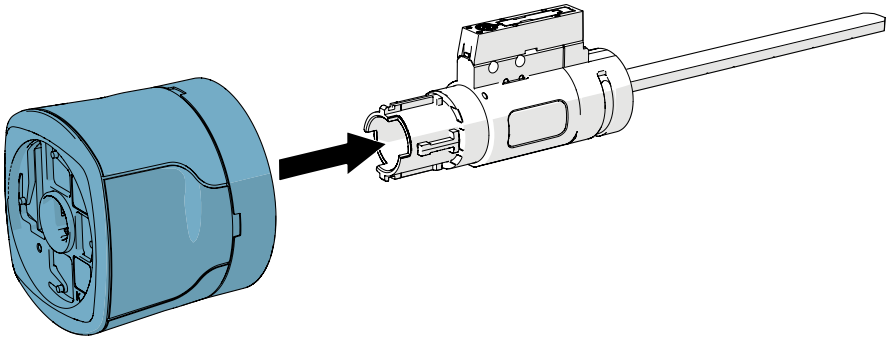

6. Rotate the knob removal tool clockwise to attach the knob.

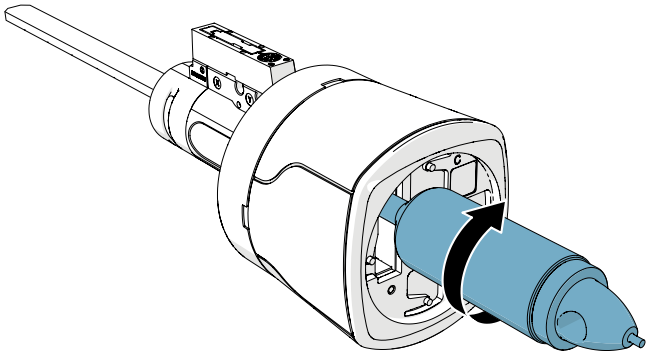

7. Insert the front cap into the knob. The iLOQ logo on the cap should be horizontal when the cylinder is locked.
   Slightly rotate the front cap clockwise by hand until it is locked in place.

NOTE! The front cap can be installed in four different orientations (0º, 90º, 180º and 270º angles) based on the orientation of the lock.

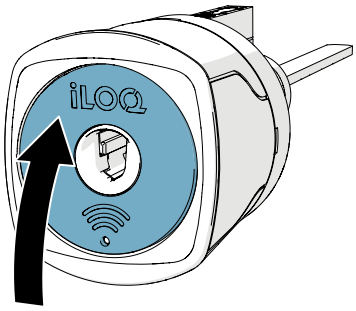

11. Converting a KIK Cylinder to a Mortise Cylinder

Parts needed:

- AX50.X.G.03.26 - 1 1/8” Mortise Conversion Kit (26D)
  1. Mortise front frame 26D
  2. Adapter plug
  3. Mortise housing 1 1/8”
  4. T20 Screws (x2)
- AX50.X.CXX -
  5. Cam for Mortise Cylinder (specify the needed cam when ordering)
- AX50.X.G.01 -
  6. T6 Screws for cam (x2)
- ANSI Cylinder Tool Kit
  7. Crown installation tool

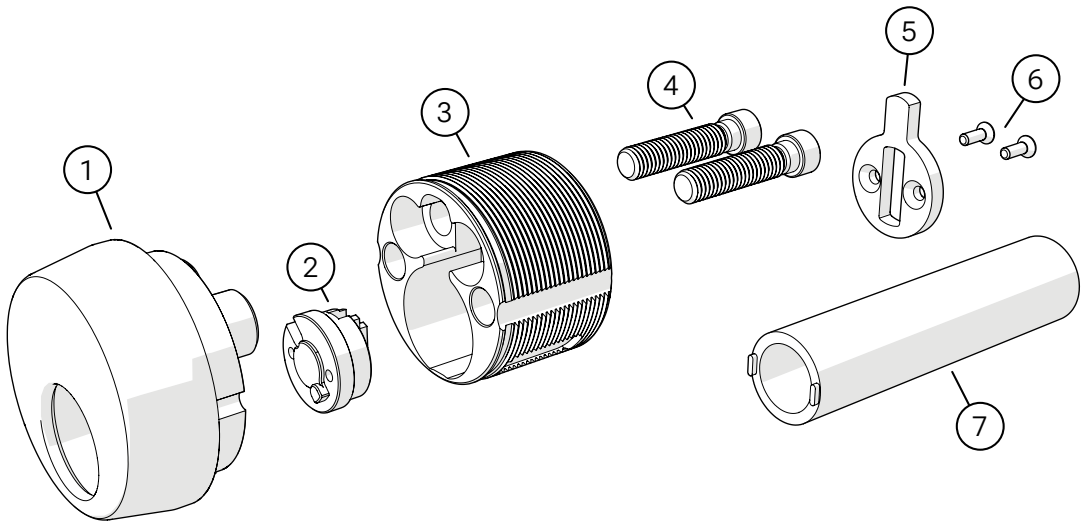

1. With a pair of tweezers, remove the KIK cylinder plunger.

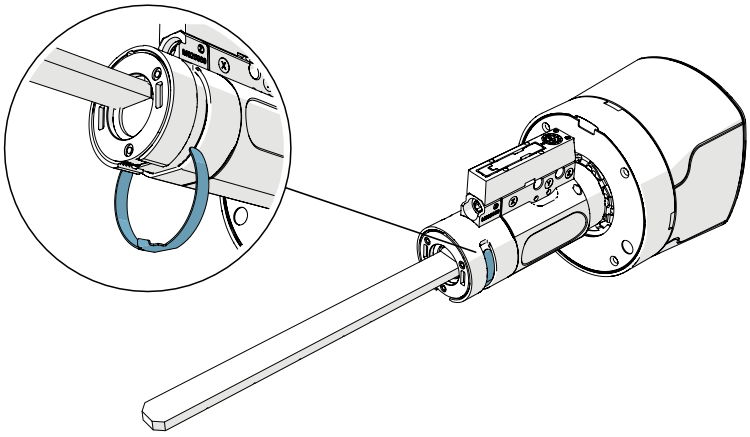

2. Insert the crown installation tool into the crown piece of the KIK cylinder and turn it counterclockwise.

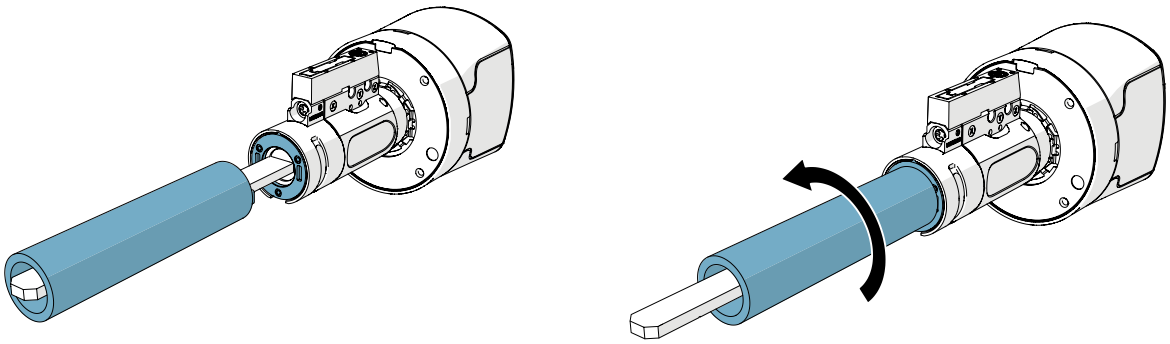

3. Remove the tailpiece from the cylinder.

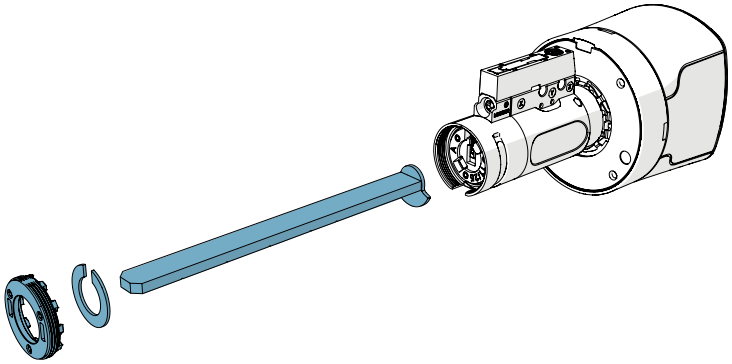

4. Insert the smaller end of the knob removal tool into the hole at the edge of the cap and gently

pull the knob removal tool to the right to remove the front cap.

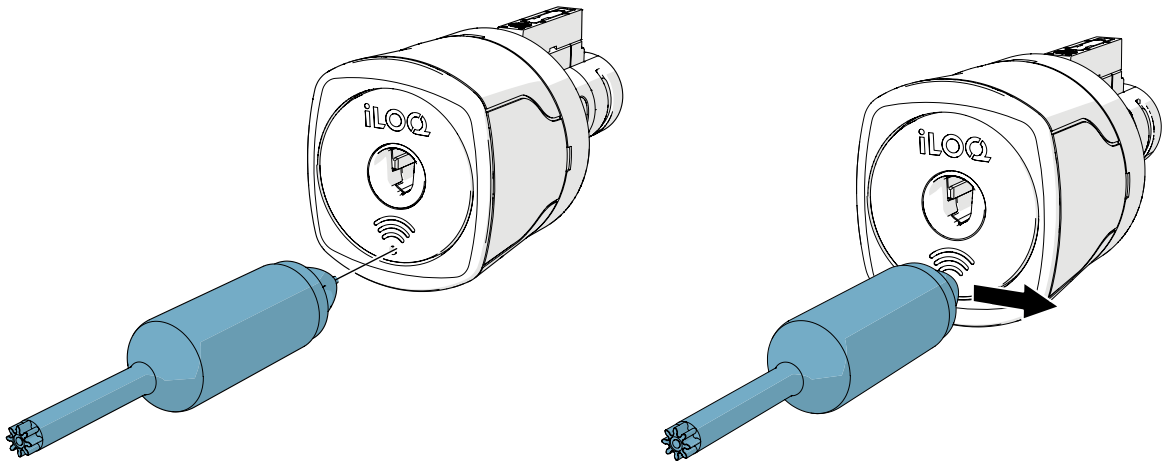

5. Insert the larger end of the knob removal tool into the front of the knob.

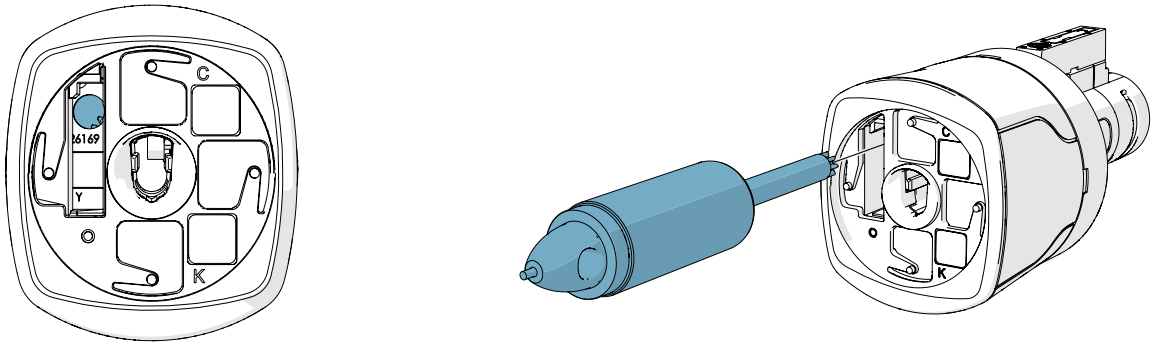

6. Rotate the knob removal tool counter-clockwise to detach the knob.

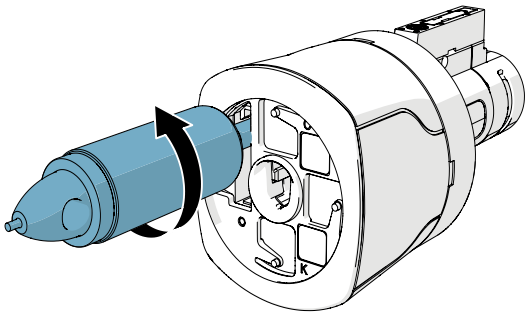

7. Pull the knob from the cylinder.

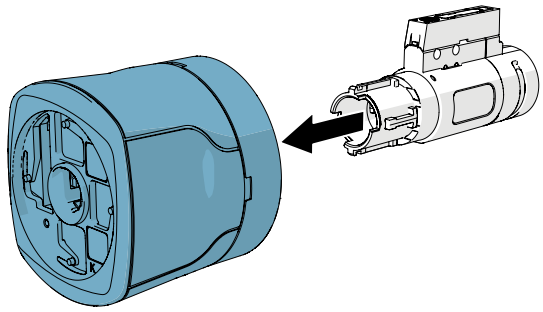

8. Insert the mortise front frame into the front of the cylinder.

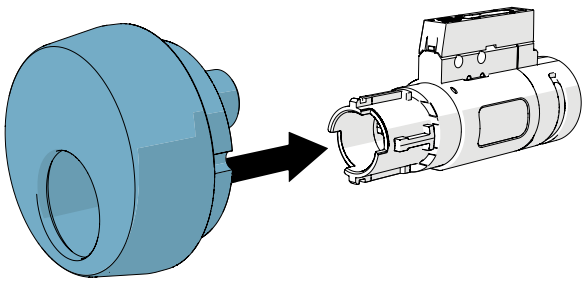

9. Insert the adapter plug and align it with the back of the cylinder.

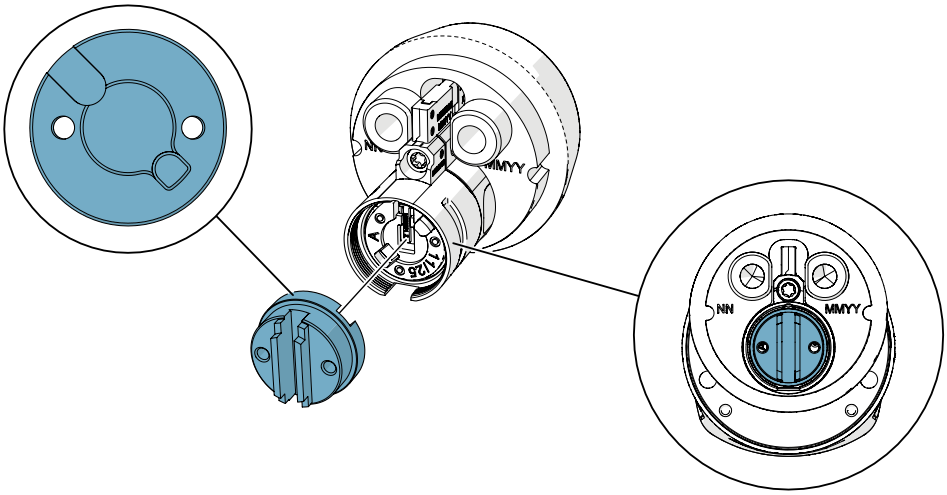

10. Attach the mortise housing to the front frame and secure it with the two T20 screws.

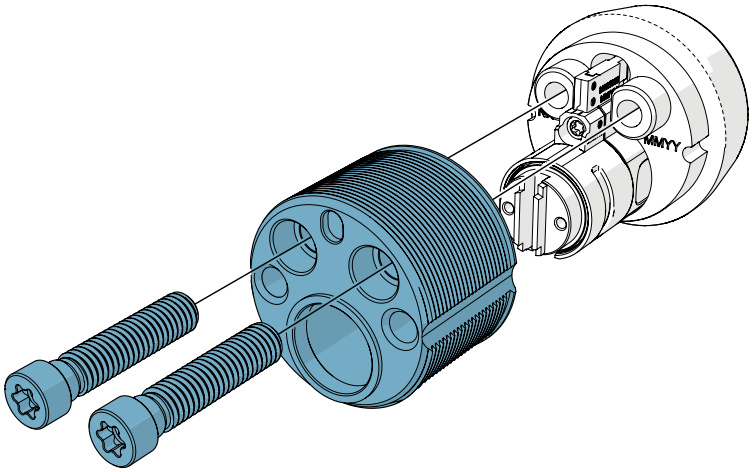

11. Attach the mortise cam to the cylinder using two T6 screws (max. 0.5 Nm of torque).

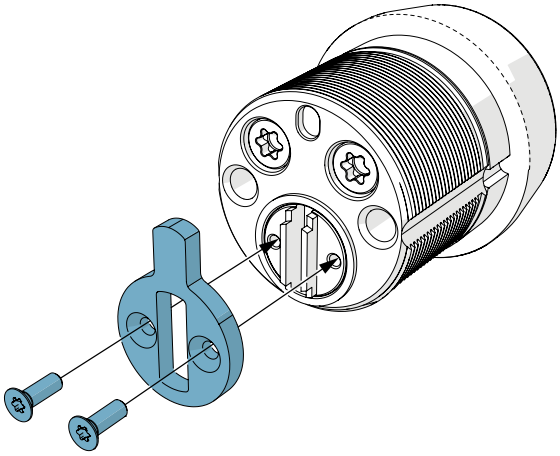

12. Slide the knob onto the cylinder until it stops.

> **!** NOTE! Make sure that the knob is inserted the correct way around so that the straight edges of the cylinder and knob align horizontally.

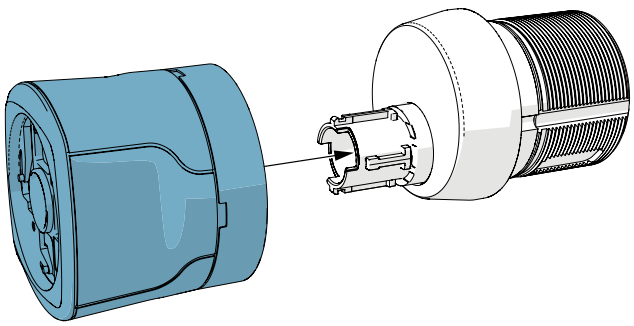

13. Rotate the knob removal tool clockwise to attach the knob.

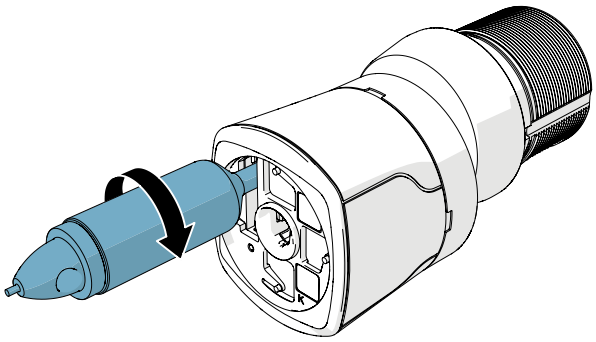

14. Insert the front cap into the knob. The iLOQ logo on the cap should be horizontal when the cylinder is locked.
    Slightly rotate the front cap clockwise by hand until it is locked in place.

> **!** NOTE! The front cap can be installed in four different orientations (0º, 90º, 180º and 270º angles) based on the orientation of the lock.

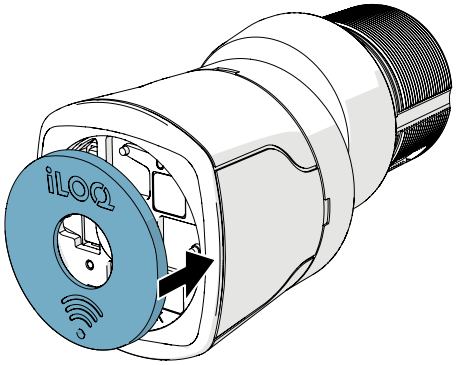

12. Disposal of decommissioned products

	Never discard an electrical appliance in household waste. Follow the local laws and regulations for safe and environmentally friendly product disposal.

NOTE! Before discarding products, bear in mind that most iLOQ products are **reusable**. All programmable products can be reset to factory settings, after which they can be reused in another system.

Recycling instructions of decommissioned products are depicted below.

Sorting	Decommissioned product
	Decommissioned iLOQ Lock Cylinders, keys, iLOQ fittings, mounting accessories and thumb turn knobs can be recycled as scrap metal.
	Decommissioned iLOQ products containing electronics and circuit boards, such as net bridges, door modules, key and RFID readers, and relay cards, must be recycled at an electrical and electronic equipment collection point.
	iLOQ products containing batteries and accumulators, such as key fobs, programming keys and clock circuits, should be recycled at a regional collection point for batteries and small accumulators.
	Most iLOQ packaging materials are suitable for cardboard and plastic recycling.

13. Compliance

The products mentioned inside this user guide are in conformity with the requirements of the directives declared on this page:

United States (FCC)

FCC Part 15 Statement:
This device complies with Part 15 of the FCC Rules. Operation is subject to the following two conditions: (1) This device may not cause harmful interference, and (2) this device must accept any interference received, including interference that may cause undesired operation.

Caution to User:
Changes or modifications not expressly approved by the party responsible for compliance could void the user's authority to operate the equipment.

Note on Interference:
This equipment has been tested and found to comply with the limits for a Class B digital device, pursuant to part 15 of the FCC Rules. These limits are designed to provide reasonable protection against harmful interference in a residential installation. This equipment generates, uses, and can radiate radio frequency energy and, if not installed and used in accordance with the instructions, may cause harmful interference to radio communications.

Supplier Declaration of Conformity Statement (SDoC)

This Declaration of Conformity is hereby issued according to Chapter 1, Subpart A, Part 2 of Title 47 of the Code of Federal Regulations by:

iLOQ Oy
Elektroniikkatie 10, FI 90590 Oulu, FINLAND

The iLOQ Electromechanical lock, Model S55, complies with the applicable requirements of FCC Rule Part 15.

U.S. CONTACT INFORMATION:
iLOQ USA Inc.
450 Lexington Avenue
New York, NY 10017
info@iloq.com
www.iloq.com

Canada (ISED)

ISED Compliance Statement:
This Class B digital apparatus complies with Canadian ICES-003.
Cet appareil numérique de la classe B est conforme à la norme NMB-003 du Canada.

CE

SIMPLIFIED EU DECLARATION OF CONFORMITY:

Hereby, iLOQ Oy declares that the radio equipment type CK55 Lock Cylinders are in compliance with Directive 2014/53/EU. The full text of the EU declaration of conformity is available at the following internet address: https://www.iloq.com/en/declaration-of-compliance/ Communication standard: NFC 13,56 MHz Load modulation (ASK), no transmitter.

iLOQ S55

KIK for Hybrid Cylinder

CK55...TL1
CK55...TL2

User Guide

iLOQ
support.iloq.com
Elektroniikkatie 10
90590 Oulu
Finland