iLOQ S55

KIK for Deadbolt Hybrid Cylinder

CK55N.N0.R00.TL2

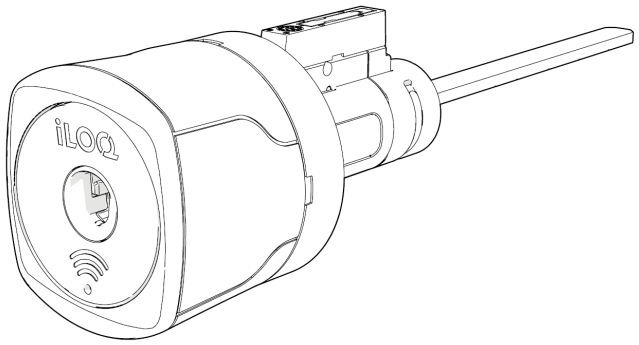

The Self-Powered Hybrid Lock Cylinder delivers advanced security without the need for external wiring or battery maintenance. This innovative cylinder harvests the energy required to authenticate user roles and unlock via either:

- The NFC field of an NFC-enabled mobile phone or iLOQ K55S.2 Key Fob.
- Kinetic energy from inserting an iLOQ K5S.7 Key.

Technical Specifications

Feature summary

- Programmable hybrid lock cylinder for iLOQ S55 locking system
- Maintenance-free
- Access using NFC-enabled mobile phones, iLOQ K55S.2 Key Fob or iLOQ K5S.7 Digital Key
- Secured with AES-256 encryption and mutual authentication
- Initial programming using a PC and iLOQ P55S.3 Programming Key connected to the server
- Role-based access management
- Timestamps audit trail
- Time restrictions available
- Individual lost keys can be blocklisted
- Field-upgradable firmware
- Comes with a standard horizontal tailpiece for deadbolt. For compatible deadbolt models, see the iLOQ deadbolt compatibility list at iLOQ.com.

Technical data

Corrosion resistance	96h Salt Spray
Ingress protection rating	IP55
Maximum temperature	80°C (176°F)
Minimum temperature	-40°C (-40°F)
Usage environment	Outdoor

Certificates

EMC Compliant	FCC, ISED

Dimensional drawing

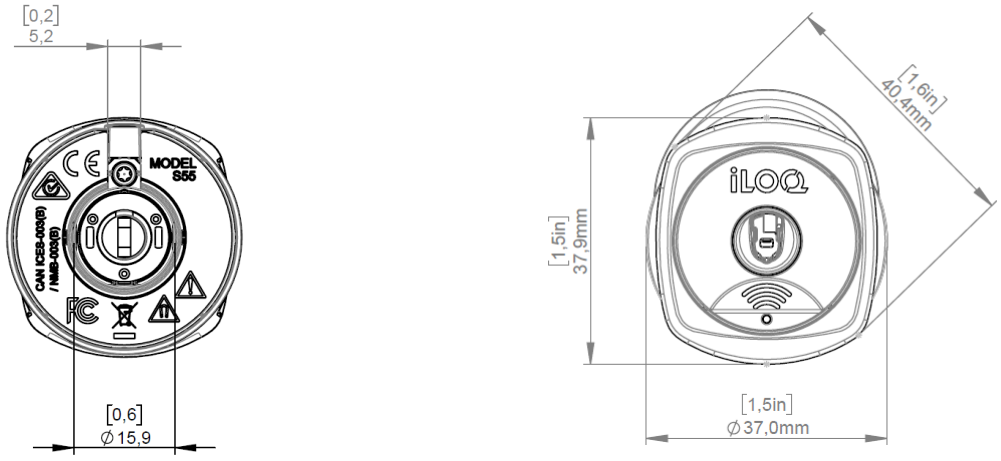

Lazy tail

